Art No	Description
88888-XXX	SP- Classe Closet -Screw Set
88888-XXX	SP- Classe Closet -Plastic Feet

VENTURE DESIGN
HOME & INTERIOR

15586-448

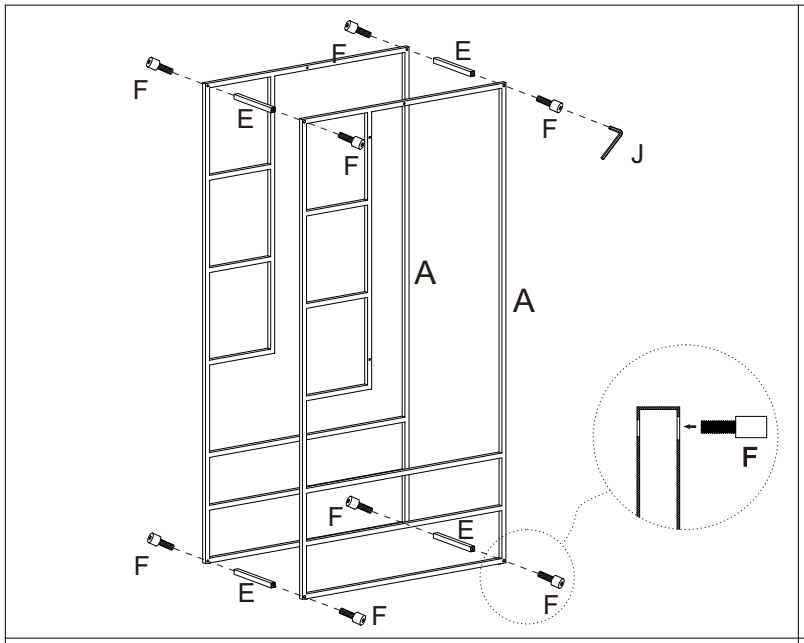

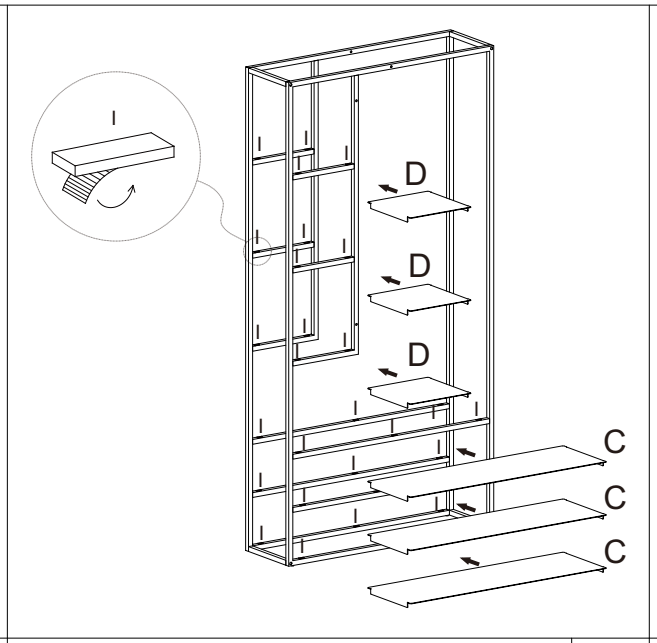

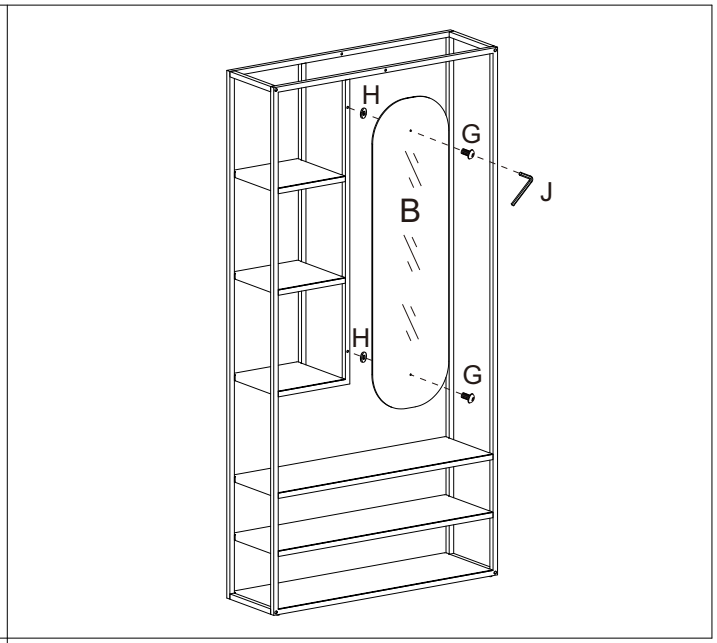

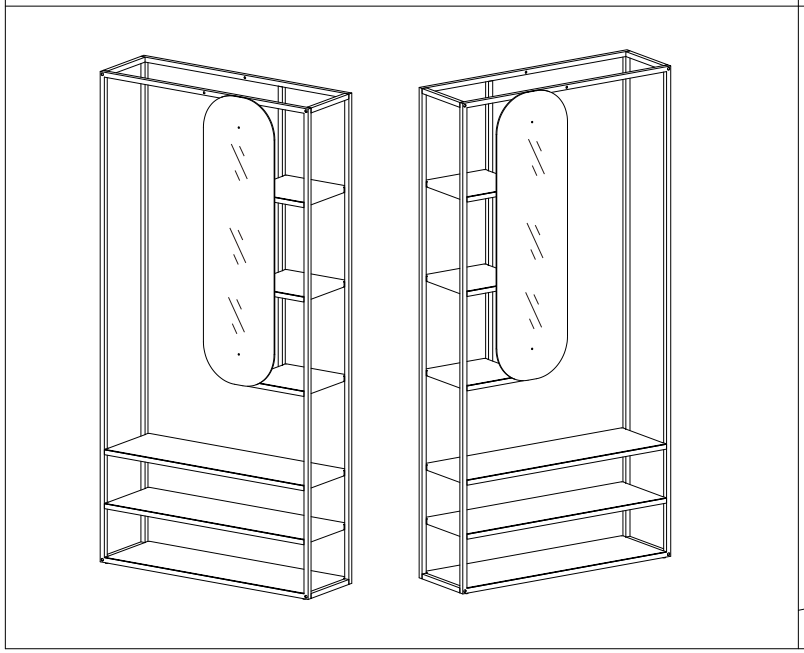

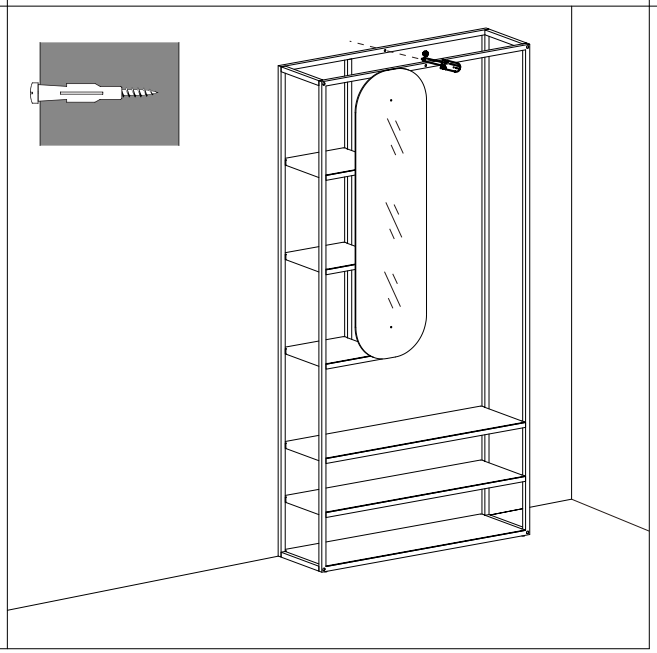

A	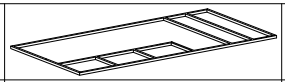	2	
B		1	
C	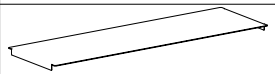	3	
D		3	
E		4	88888-XXX
F		8	88888-XXX
G		2	88888-XXX
H		2	88888-XXX
I		30	88888-XXX
J		1	88888-XXX