Art No	Description
88888-XXX	SP-Leif Dining Table -Screw Set
88888-XXX	SP-Leif Dining Table -Plastic Feet

VENTURE DESIGN
HOME & INTERIOR

15591-888

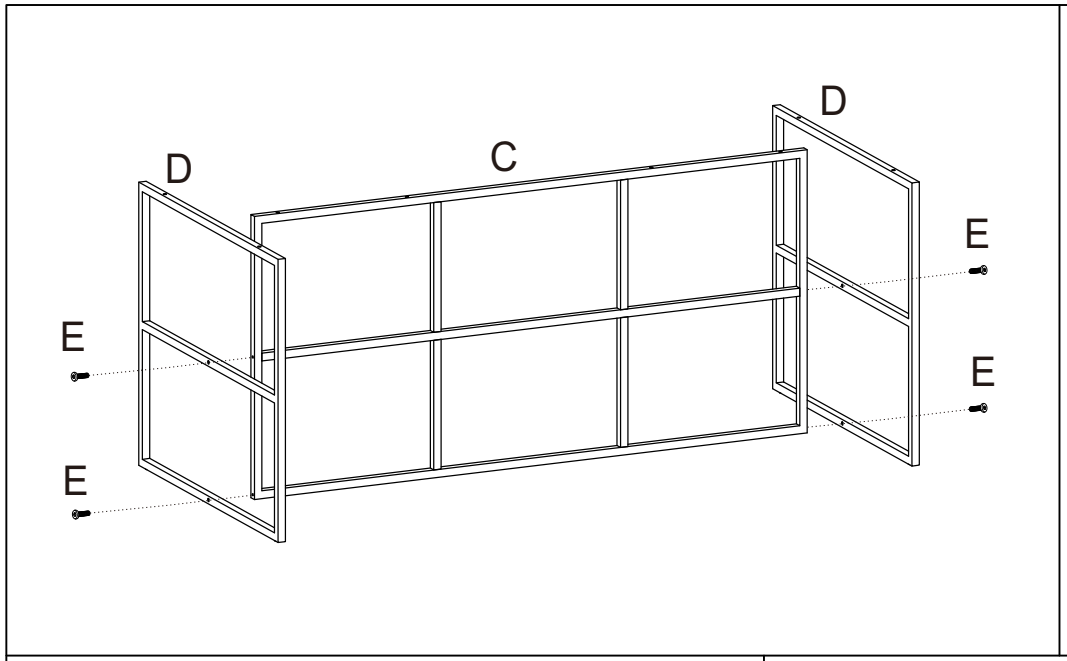

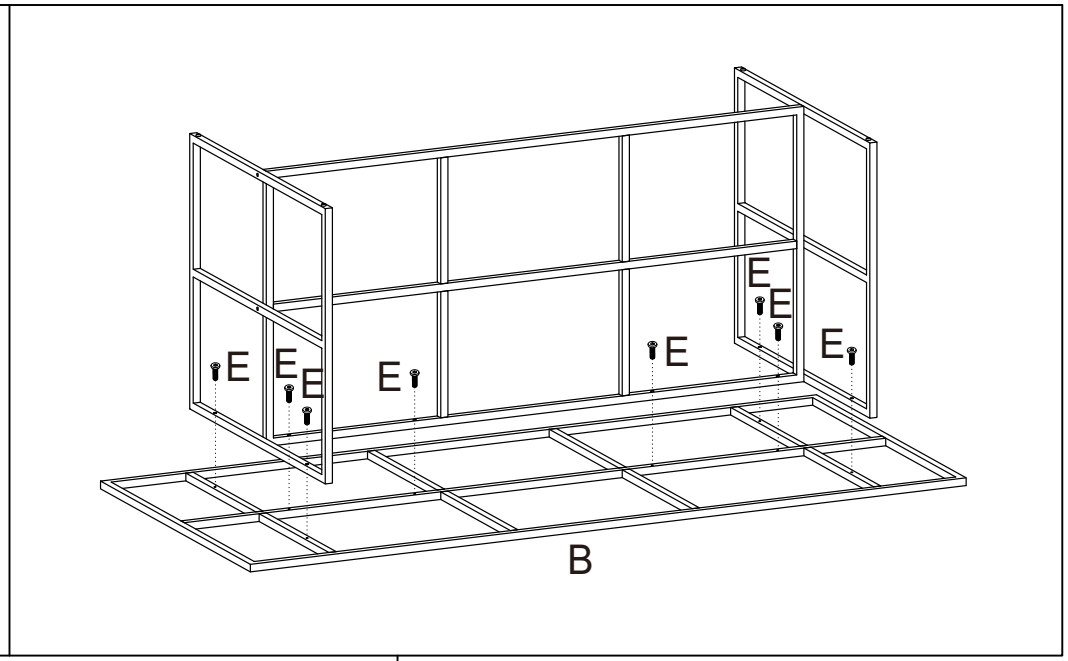

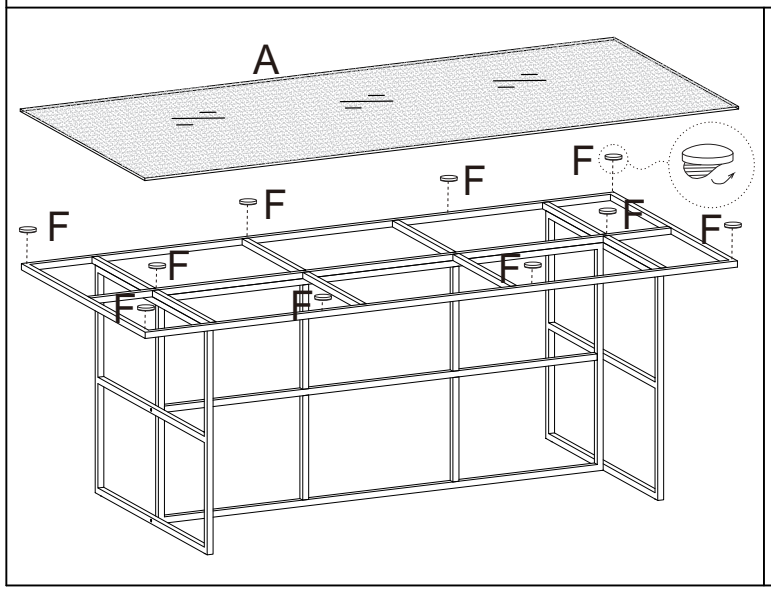

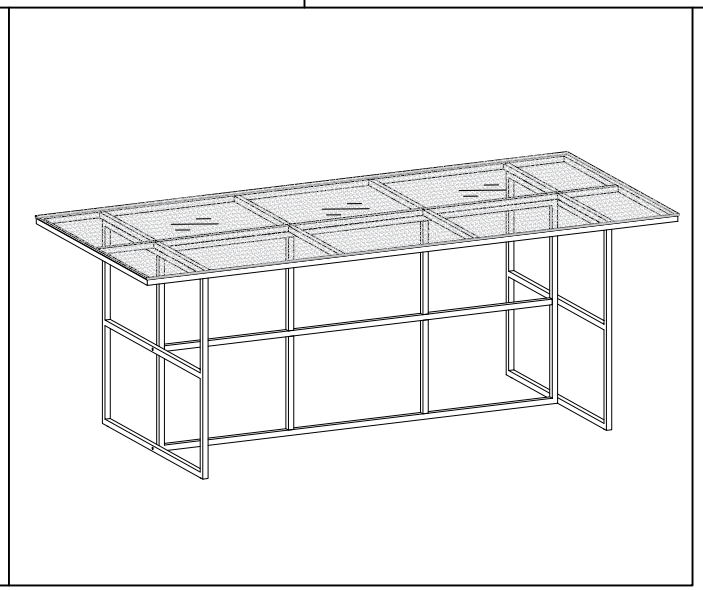

A	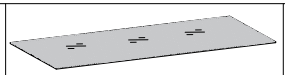	1	
B	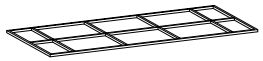	1	
C	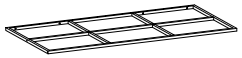	1	
D	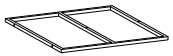	2	
E		12	88888-XXX
F		10	88888-XXX
G		1	88888-XXX