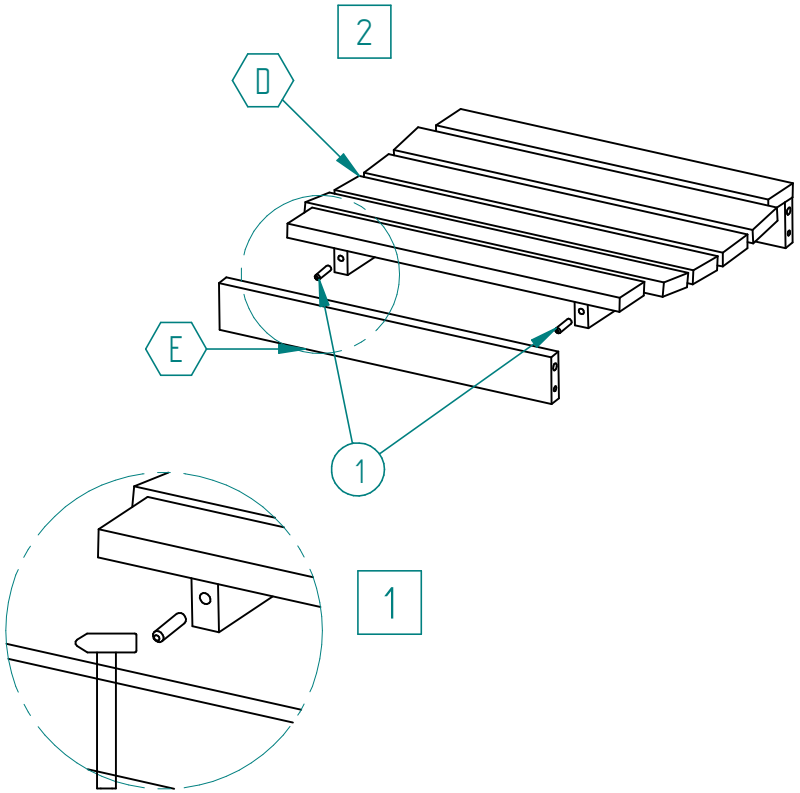

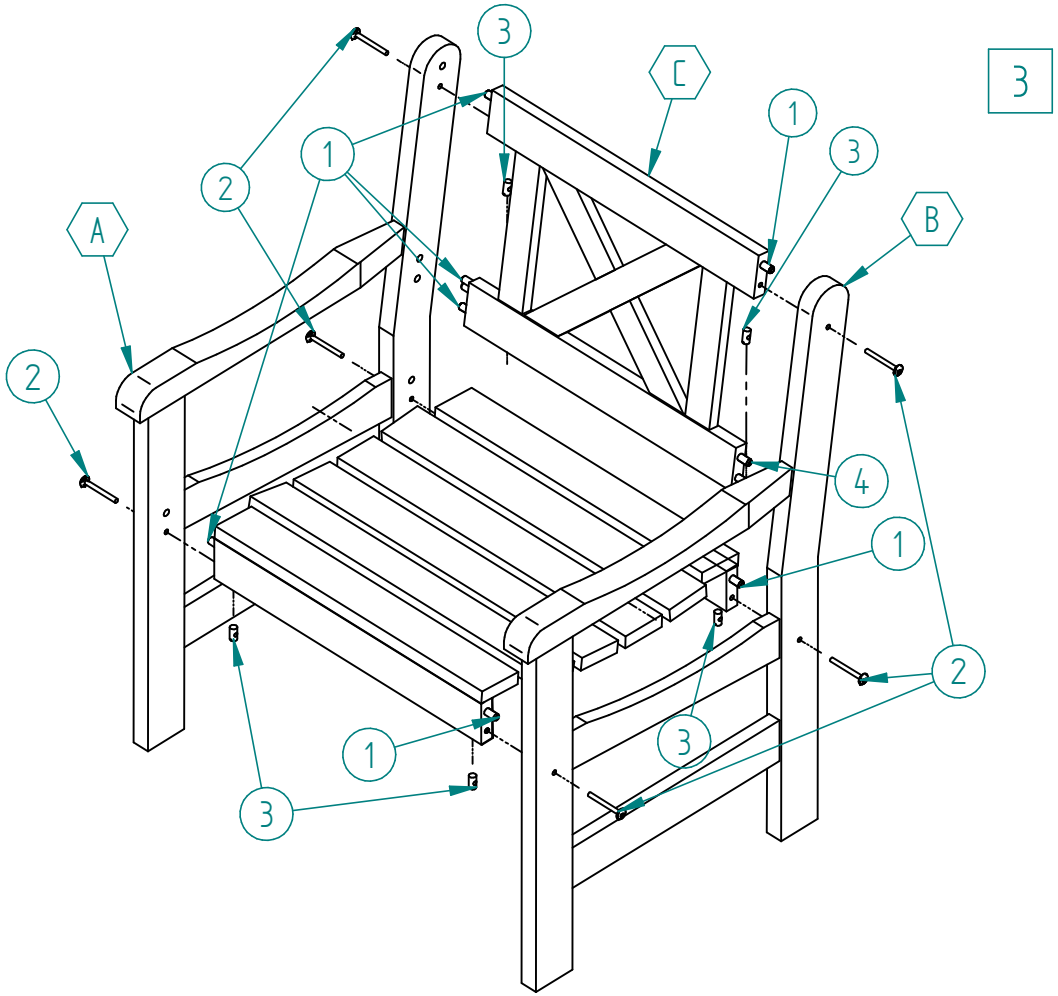

1	10x35	14
2	6x55	6
3	6x10x20	6
4		1

A x1
B x1
C x1
D x1
E x2

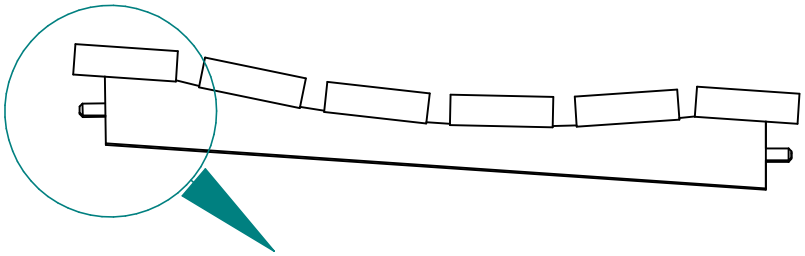

NB! Please assemble seat in correct direction-under seat slat`s obtuse angeled side front.