INSTRUCTION MANUAL

Model: Kjøbenhavn Mini lysekrone

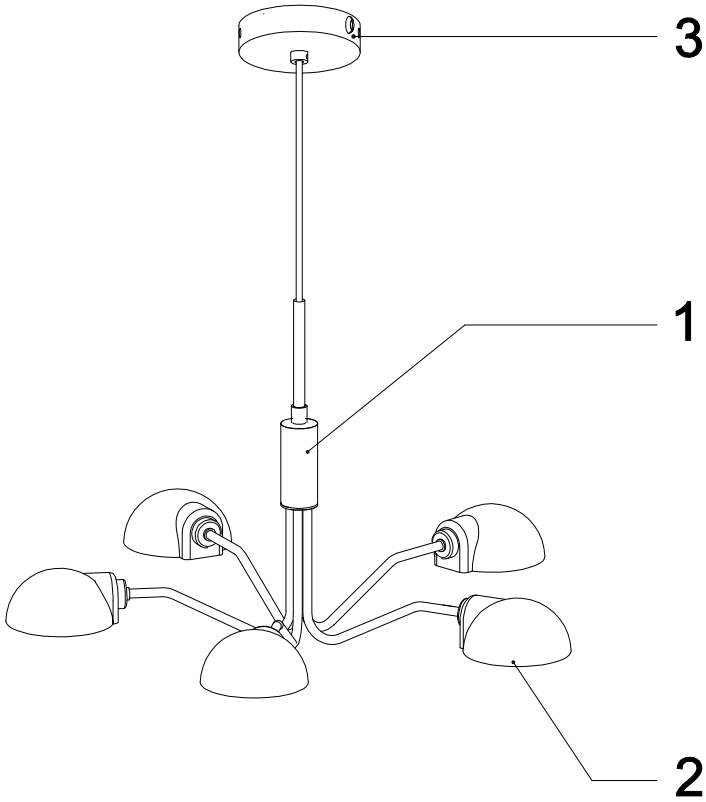

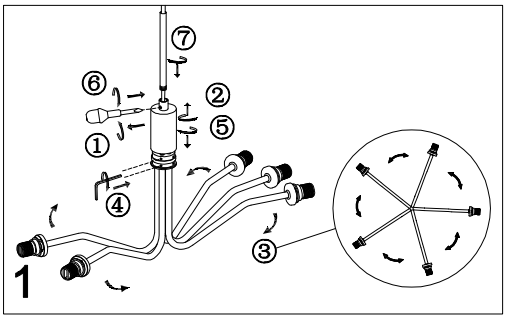

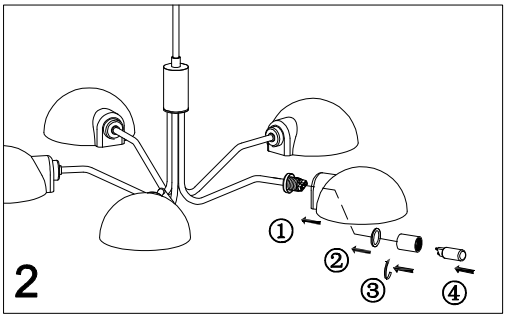

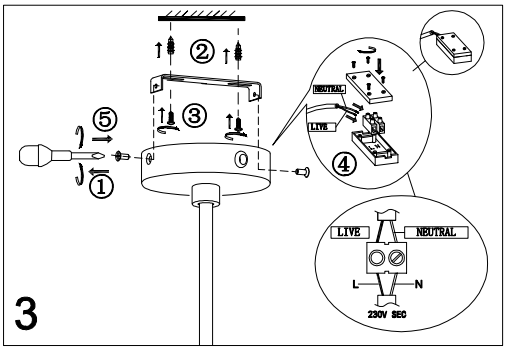

INSTRUCTION MANUAL

1 Follow the instruction sketch.

2 Make sure power is OFF on the outlet, before beginning the installation.

3 Insert the light bulb.

4 Go through point 1 to 3 before connecting the lamp to the power.

230V.5xG9 .LED MAX 28W