1

Not included / Non incluso /Non Inclus / Nie zawarty/ No incluido / Ingår ej

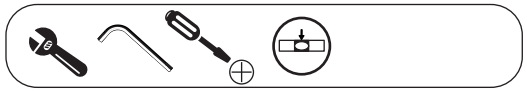

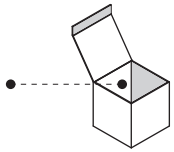

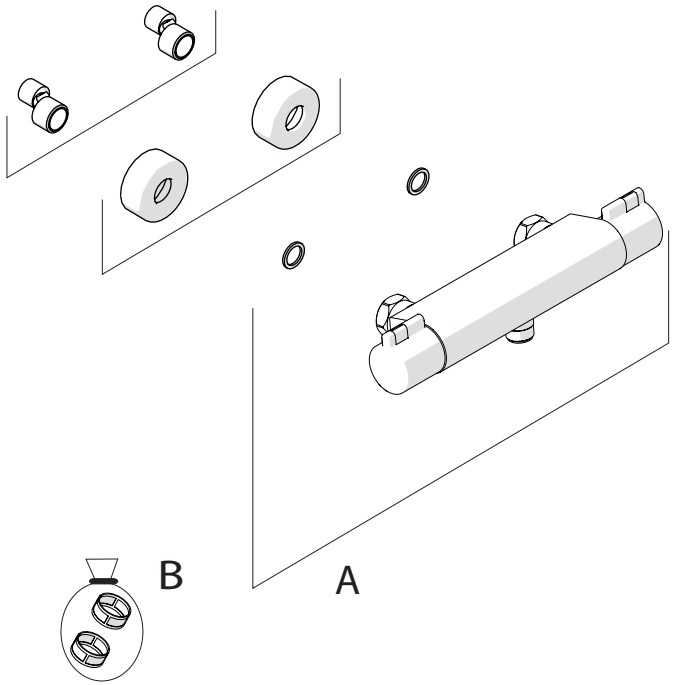

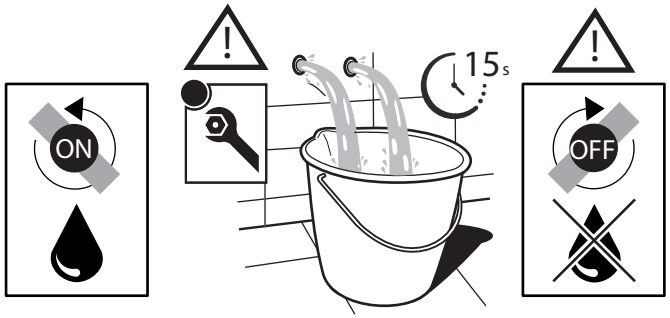

2

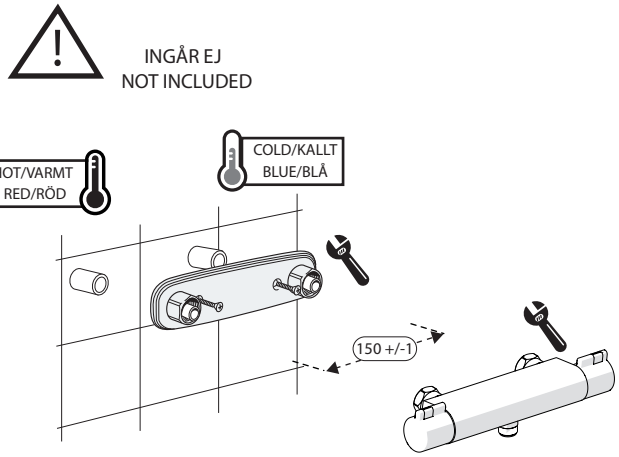

3

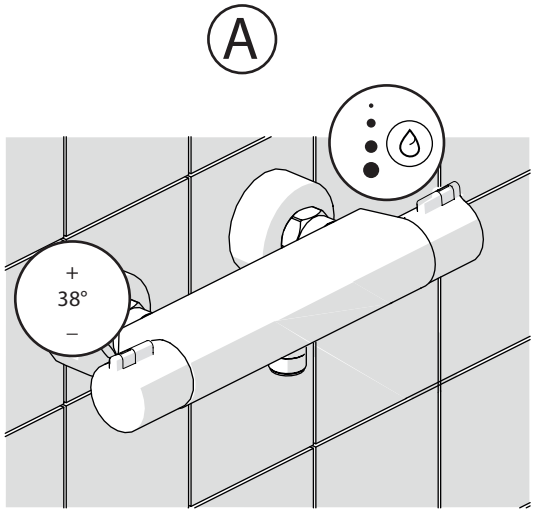

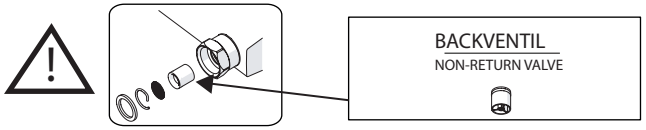

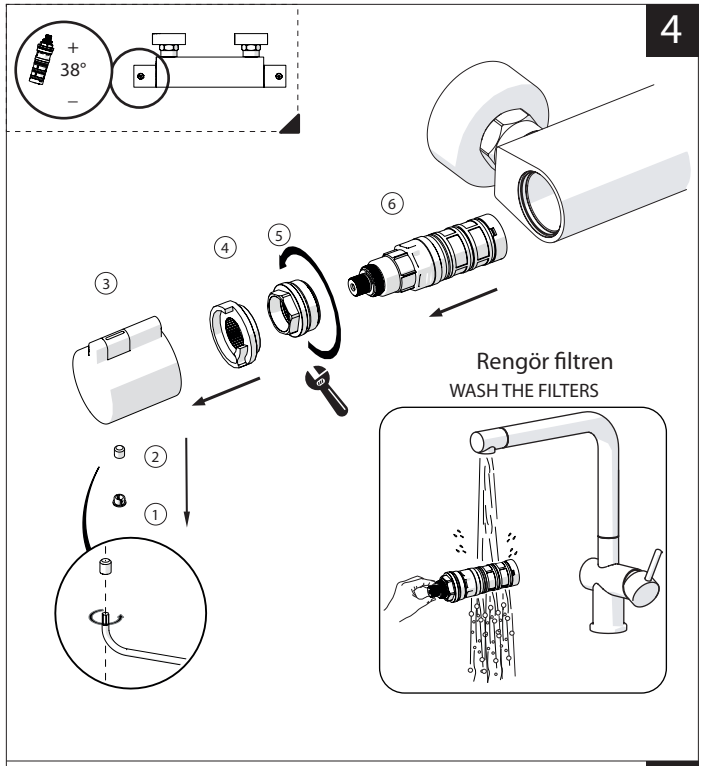

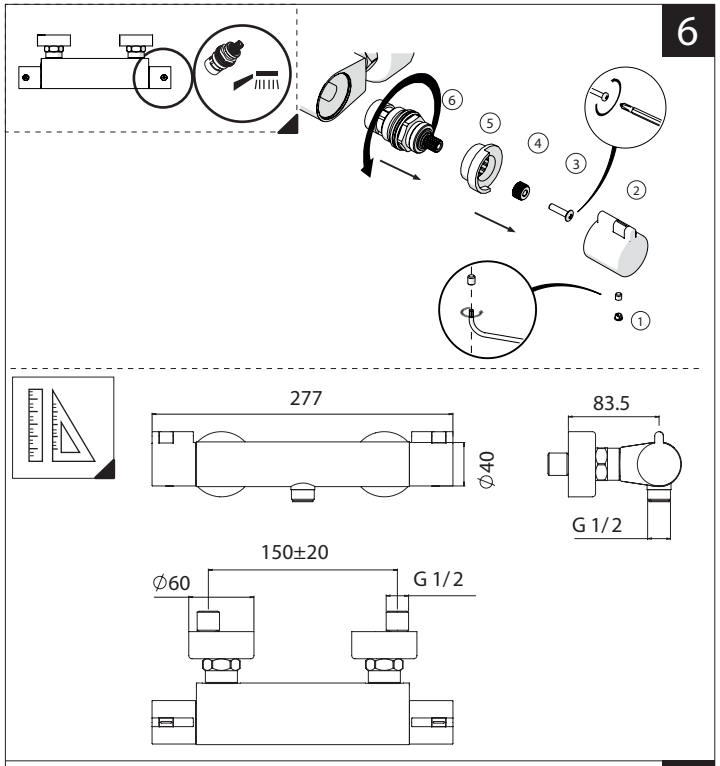

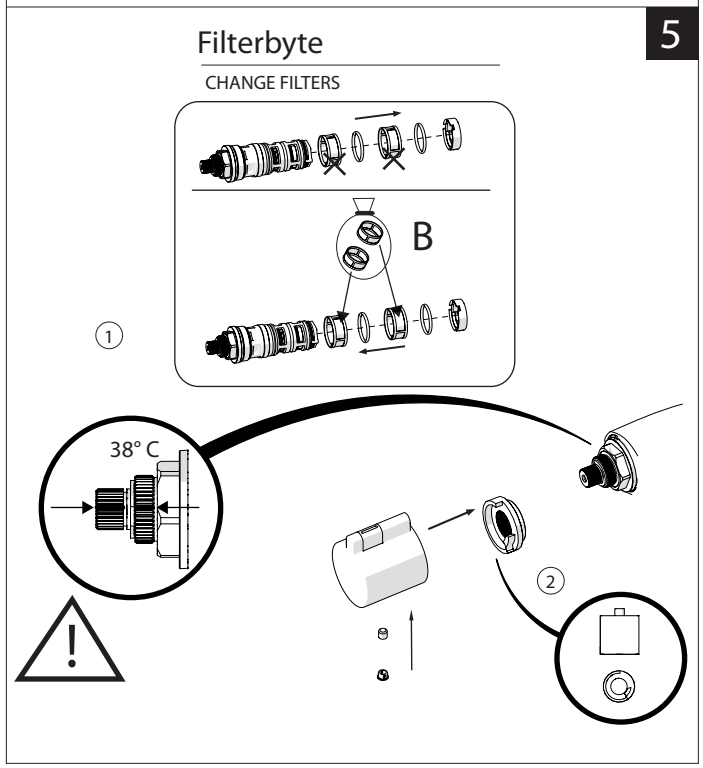

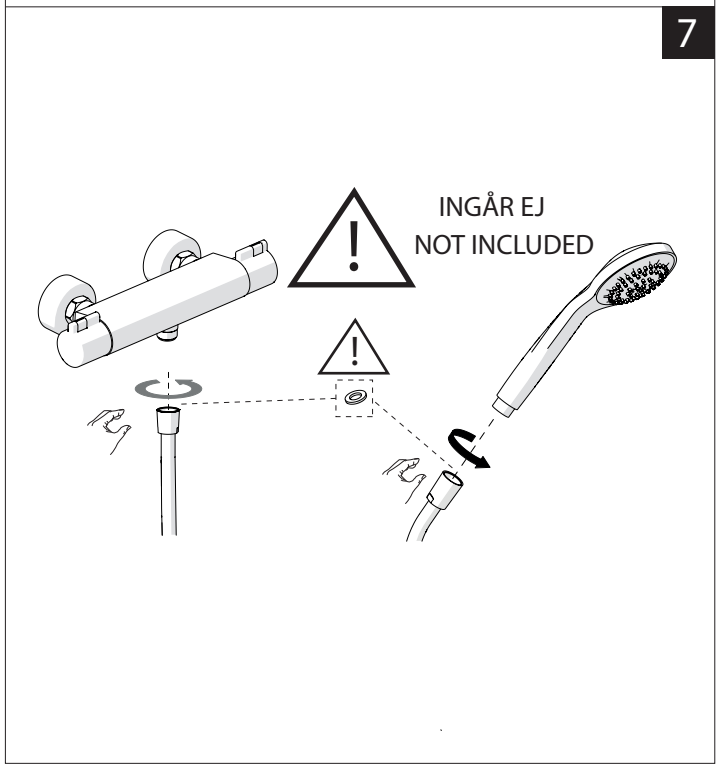

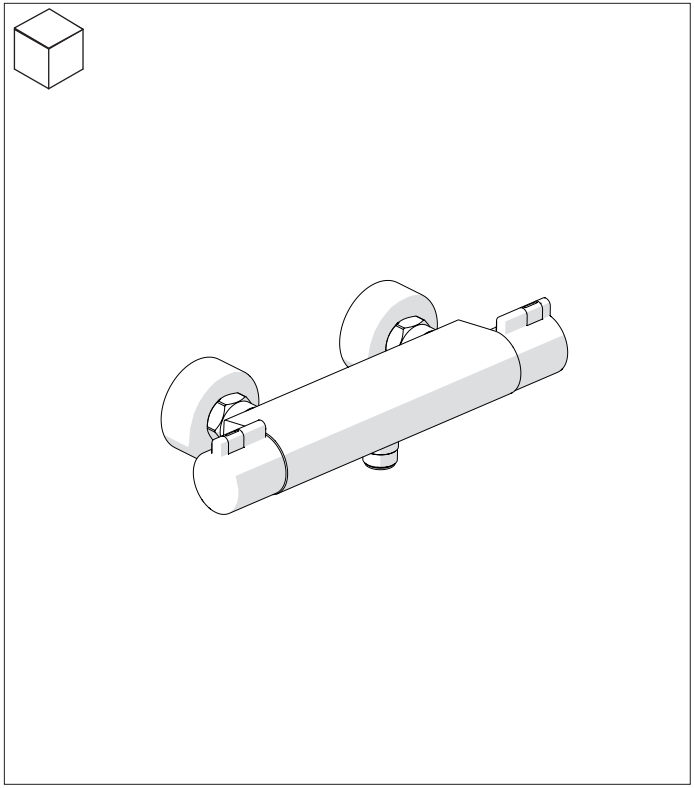

Innan start / BEFORE STARTING
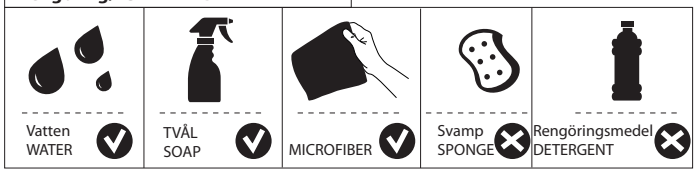
Rengöring/ CLEANING